# PSI 308 412 F

**Inductive Proximity Sensors**

## Technical parameters

**Nominal Sensing Distance Sn**
15 mm

**Effective Sensing Distance Sr**
12 – 18 mm

**Housing Dimensions**
M30

**Mounting**
Non-Flush

**Hysteresis**
(0,1 -0,15) x Sn

**Nominal Voltage Un**
24 VDC

**Supply Voltage Uc**
10 – 30 VDC

**Supply Current Ic**
< 10 mA

**Output Current Iz**
? 200 mA

**Switching Frequency**
400 Hz

**Short-Circuit Protection**
Yes

**Polarity Reversal Protection**
Yes

**Output Type**
NPN nc

**Housing Material**
Nickel Plated Brass

**Ambient Temperature Range T**
-25°C…+70°C

**Target Presence Indicator**
LED

**Output Type**
Connector M12

**Protection Standard**
IP 67

## Product image

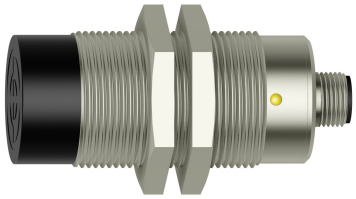

## Dimensions

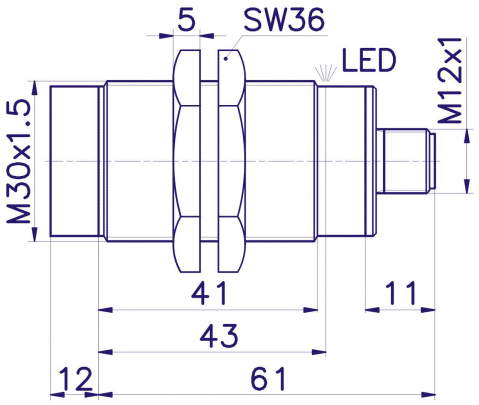


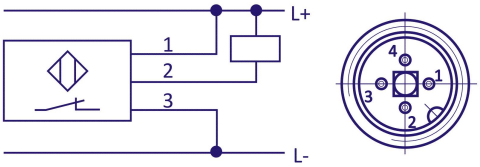


**Company Head Office**
PLOSKON AT s.r.o.
Jesenná 1
080 01 Prešov
Slovak Republic

**Telephone**
+421 / (0)51 7732 836
+421 / (0)51 7731 003

**E-mail**
obchod@ploskon.sk

**Website**
www.ploskon.sk

**Billing information**
PLOSKON AT s.r.o.
I?O:36483354
DI?:2020009860