PDI 308 412 S

Inductive Proximity Sensors

Technical parameters

Nominal Sensing Distance Sn
30 mm

Effective Sensing Distance Sr
24 – 36 mm

Housing Dimensions
M30

Mounting
Non-Flush

Hysteresis
(0,1 -0,15) x Sn

Nominal Voltage Un
24 VDC

Supply Voltage Uc
10 – 30 VDC

Supply Current Ic
< 10 mA

Output Current Iz
? 200 mA

Switching Frequency
20 Hz

Short-Circuit Protection
Yes

Polarity Reversal Protection
Yes

Output Type
NPN nc

Housing Material
Nickel Plated Brass

Ambient Temperature Range T
-25°C…+70°C

Target Presence Indicator
LED

Output Type
Connector M12

Protection Standard
IP 67

Product image

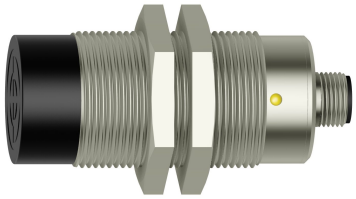

Dimensions

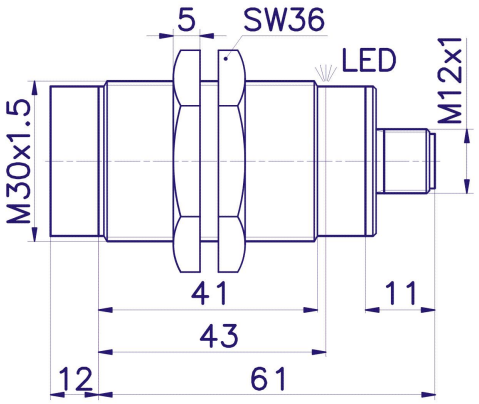

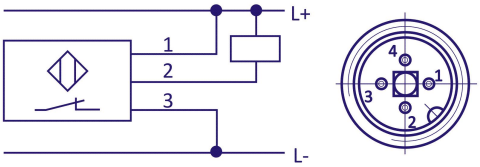

Company Head Office
PLOSKON AT s.r.o.
Jesenná 1
080 01 Prešov
Slovak Republic

Telephone
+421 / (0)51 7732 836
+421 / (0)51 7731 003

E-mail
obchod@ploskon.sk

Website
www.ploskon.sk

Billing information
PLOSKON AT s.r.o.
I?O:36483354
DI?:2020009860